allorum™
architectural hardware

cabinet mounting system

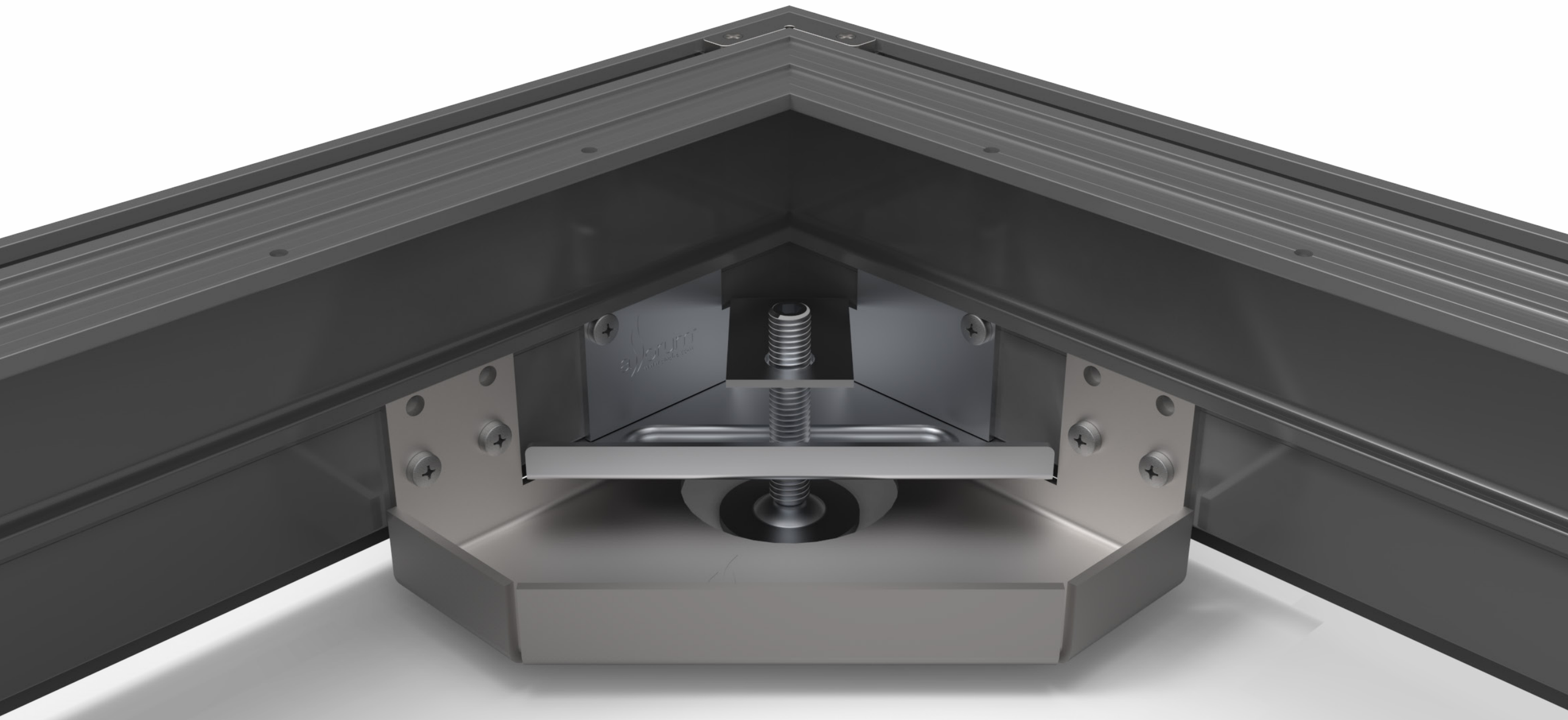

Patent Pending

© 2016-2017 cindre llc, all rights reserved

allorum™ architectural hardware

allorum™ architectural hardware presents a cabinet mounting system that solves today's problems with the installation of cabinets, be it institutional casework or kitchen cabinets.

Patent Pending

Index

Product Benefits 4
Toe Kick for Base & Tall Cabinets 5
Mounting Rail for Tall Cabinets 6
Mounting Rail for Wall Cabinets 7
Base Components 8
Base Components (cont.) 9
Wall Components 10
Wall Components (cont.) 11
Business Case 12
Engineering Document 13
- Table of Contents 13
- General Notes 14
- General Notes (cont.) 15
- Abbreviations 16
- Design Criteria 17
- Overhead Cabinet Attached to Wall 18
- Tall Cabinet Attached to Floor & Wall 19
- Base Cabinet Attached to Floor Only 20
- Seismic Bracket Detail, Mounting Rail & Overhead Seismic Bracket Details . . 21
- Toekick Assembly Detail & Cabinet to Toekick Attachment Detail 22
- Attachment Details to Supporting Floor 23

Contact Information 24

Product Benefits

The cabinet mounting system was designed to improve the entire cabinet experience, from installation to cost of ownership and safety...

The product works with virtually any cabinet.

- ✓ No blocking required, a huge savings
- ✓ Waterproof base; no mold or mildew
- ✓ OPM13 pre-approved for seismic areas
- ✓ System for base, tall and wall cabinets
- ✓ Much stronger & aesthetically superior
- ✓ Significantly improves installation time
- ✓ Metal system designed for wood shops

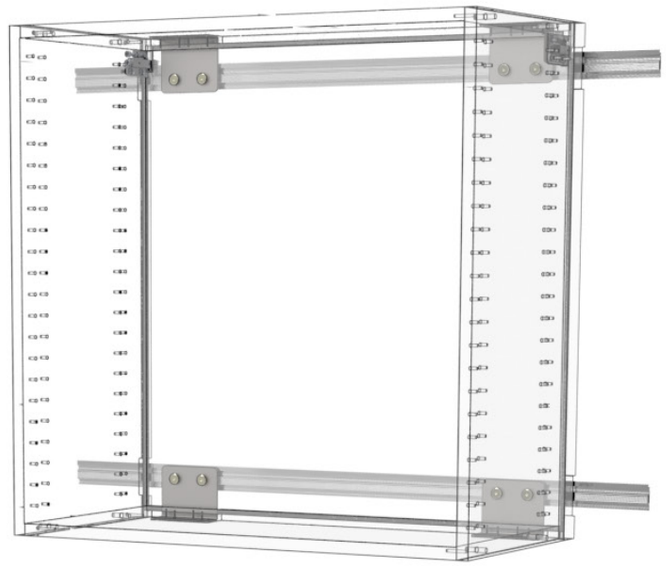

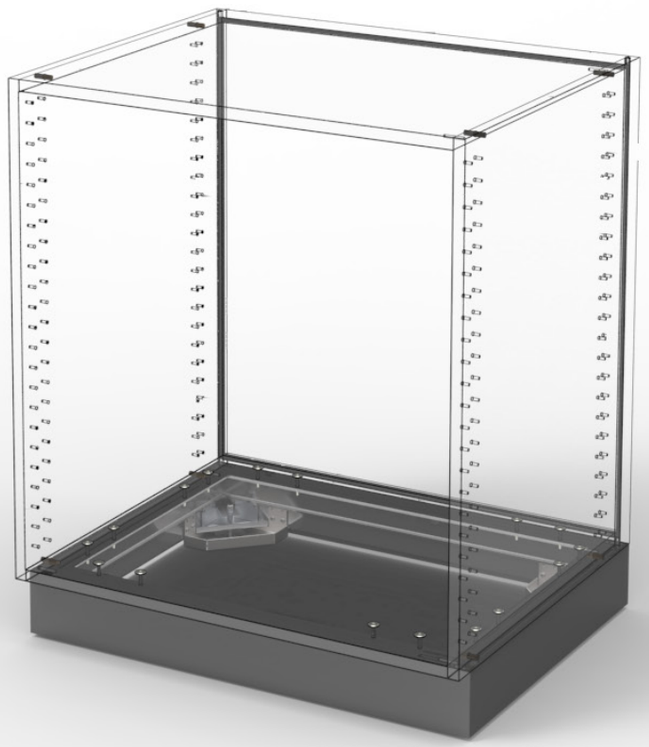

Patent Pending

Toe Kick for Base & Tall Cabinets

Features:

- ✓ Anodized aluminum plinth
- ✓ Available in 2”, 4” and 6” heights
- ✓ OSHPD OPM 13 approved
- ✓ Base supports 3000 lbs
- ✓ Max width 60”, max depth 48”
- ✓ Available assembled, as kits or in bulk quantities
- ✓ Works with Lockdowel® E-fasteners, 1/4”/20 bolts or self drilling screws

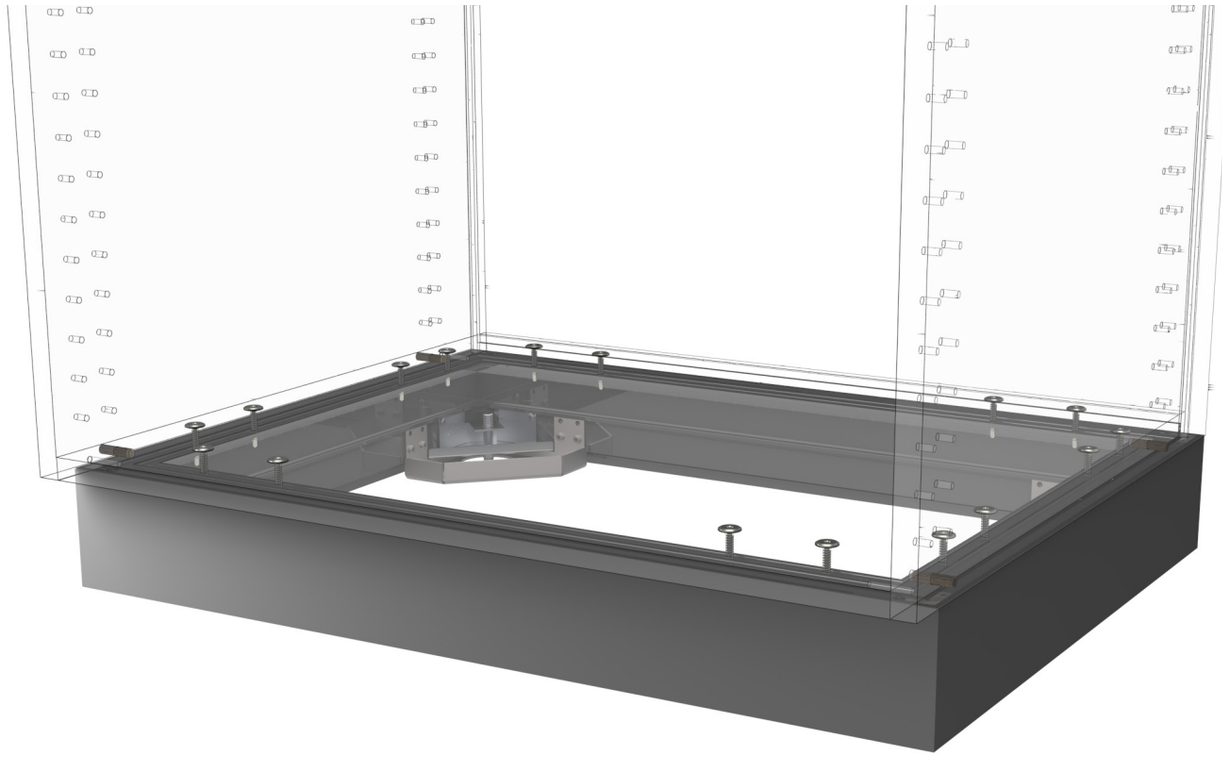

Patent Pending

Mounting Rail for Tall Cabinets

Features:

- ✓ Aluminum double wall rail
- ✓ Same rail as for wall cabinets
- ✓ OSHPD OPM 13 approved

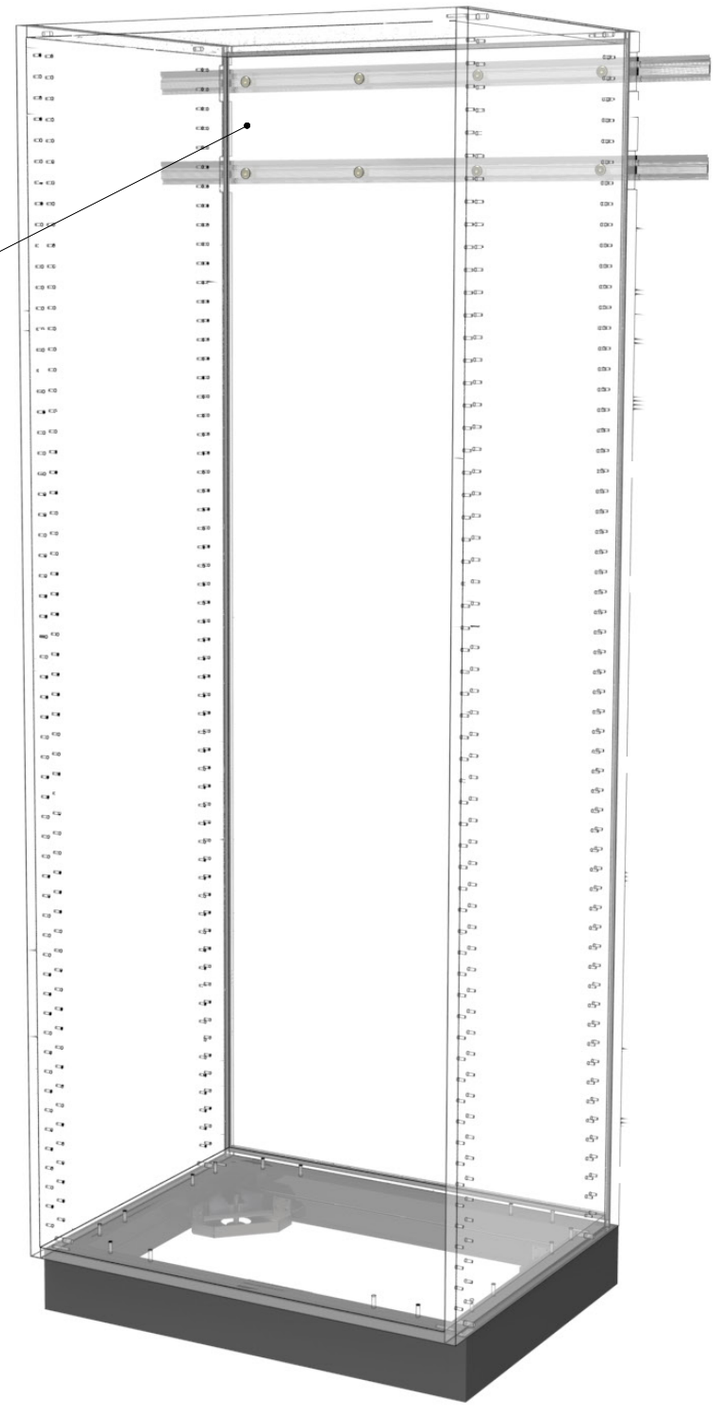

Patent Pending

Mounting Rail for Wall Cabinets

Features:

- ✓ Aluminum double wall rail
- ✓ 10 GA seismic bracket
- ✓ OSHPD OPM 13 approved
- ✓ Height & depth adjustable
- ✓ Supports 600lbs per cabinet
- ✓ Max depth 21”

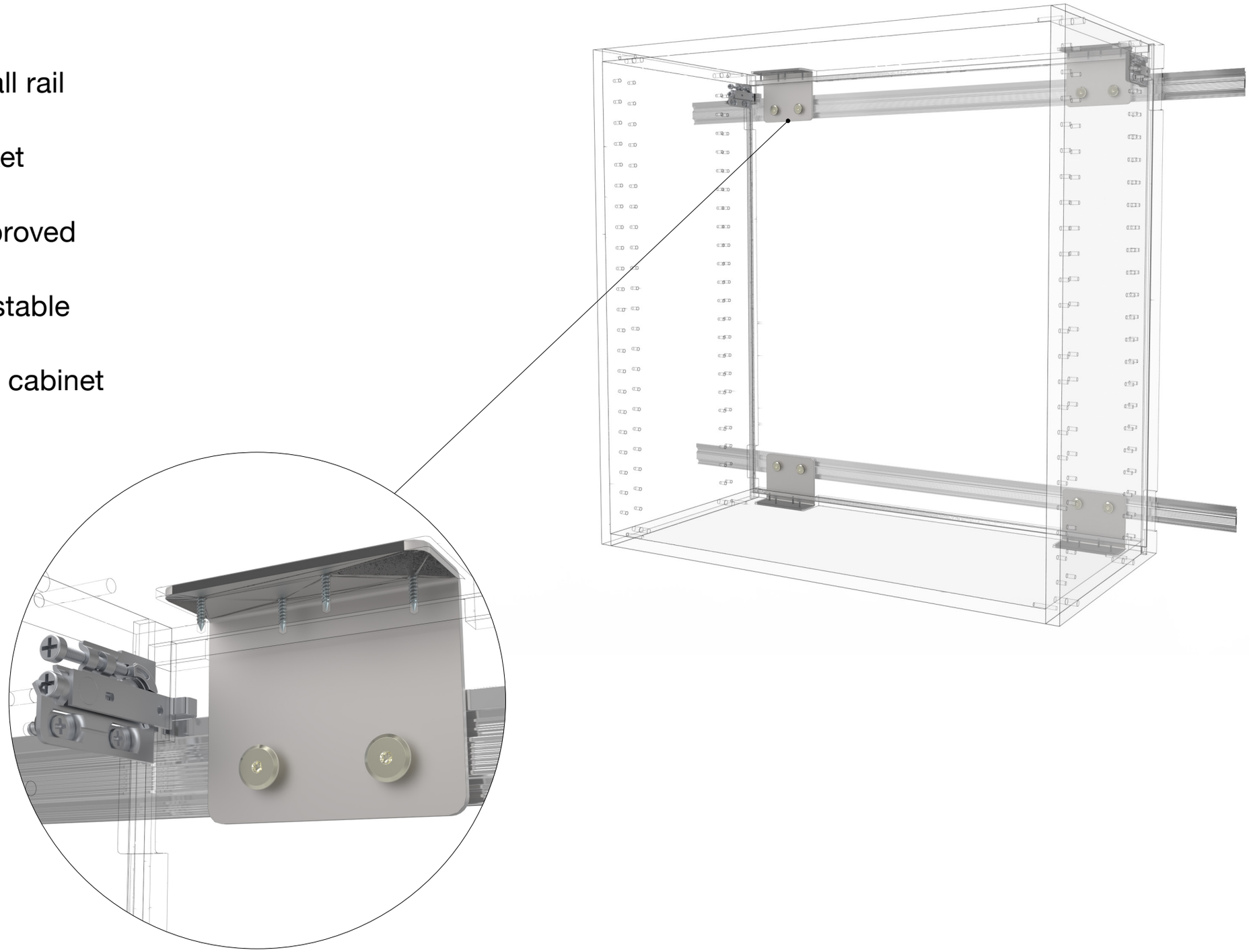

Patent Pending

Base Components

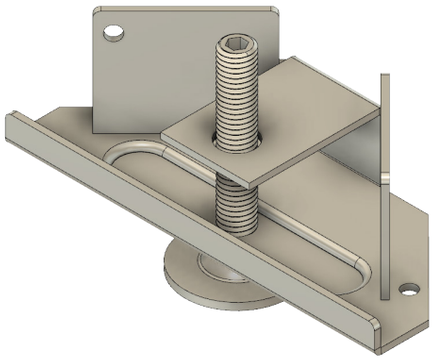

111.015.0000
Base Leveler
Electro Galvanized

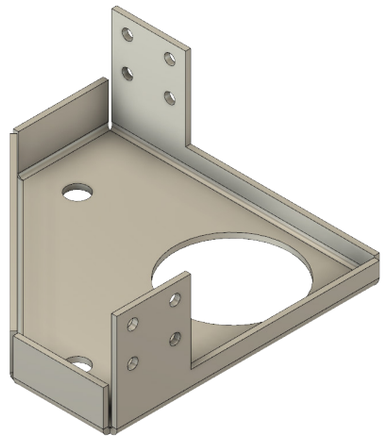

106.015.0002
Seismic Corner Bracket
Electro Galvanized

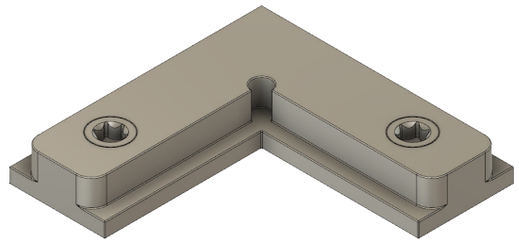

106.004.0003
Base Corner Connector Bracket
Clear Anodized

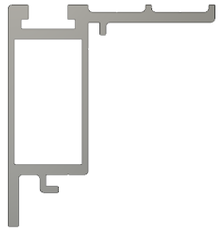

300.026.0042
Toe Kick 2”
Black Anodized

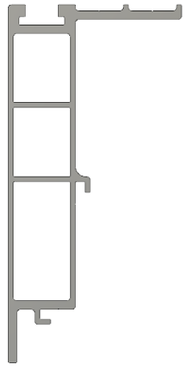

300.026.0043
Toe Kick 4”
Black Anodized

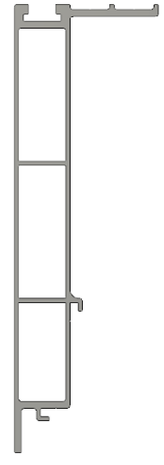

300.026.0044
Toe Kick 6”
Black Anodized

Base Components

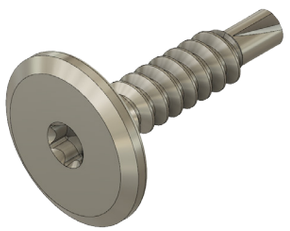

100.006.0002
Wall and Base Mounting Screw
Nickel

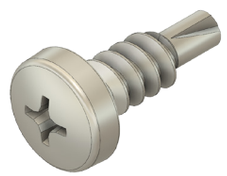

100.015.0004
Seismic Corner Bracket Set Screw
Nickel

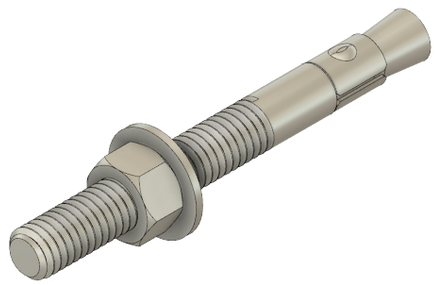

100.015.0005
Concrete Anchor 3/8”x3.5”
Electro Galvanized

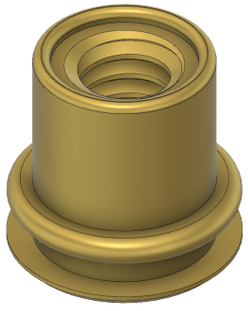

105.014.0004
Cinched Nut 1/4”/20
Electro Galvanized

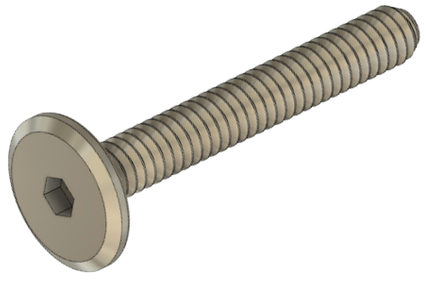

100.006.0093
Base Connector Bolt 1/4”/20
Nickel

Wall Components

300.004.0045
Wall Hanging Rail
Clear Anodized

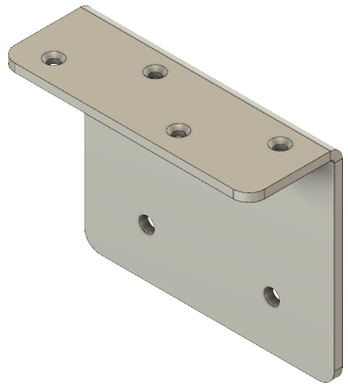

106.015.0004
Seismic Wall Bracket
Electro Galvanized

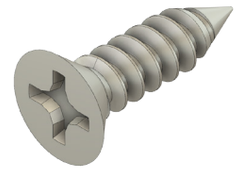

100.015.0014
Flathead Screw for Wall Bracket
Electro Galvanized

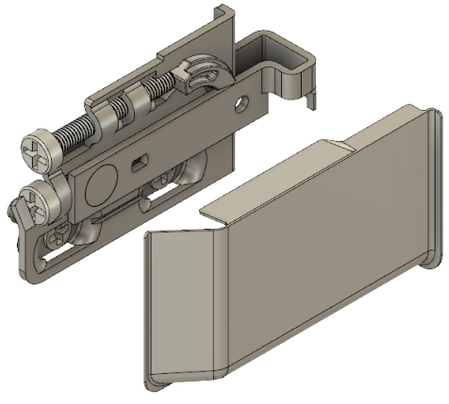

116.112.0004 / 116.112.0006
SCARPI 4 Left / Cover
Nickel

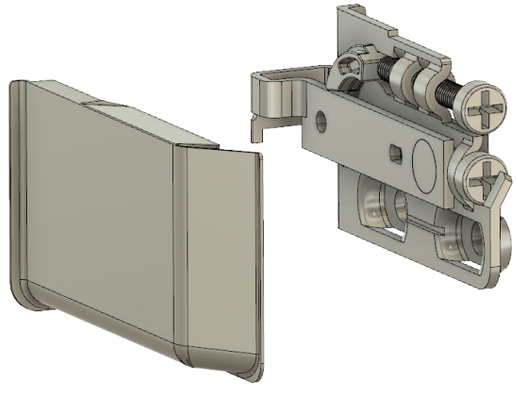

116.112.0005 / 116.112.0007
SCARPI 4 Right / Cover
Nickel

202.021.0015
ACP 4mm 0.5/3/0.5 5’x9’ Sheet
Brushed / Clearcoat

Wall Components

123.001.0086 White
123.002.0086 Black
123.006.0086 Nickel
Wall Notch Cover

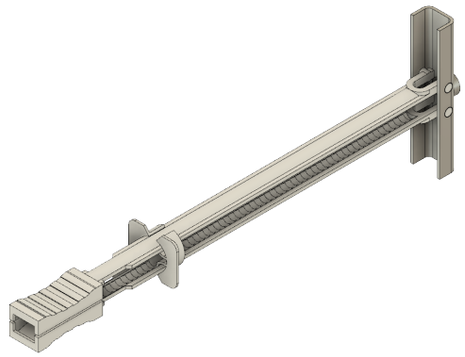

100.001.0017
Toggle Anchor
White

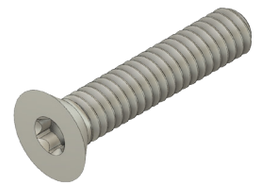

100.015.0018
Toggle Screw 2”
Electro Galvanized

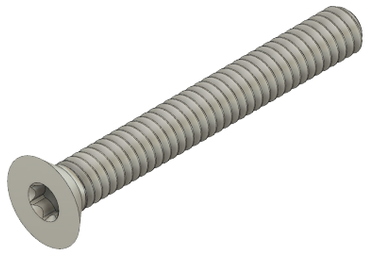

100.015.0019
Toggle Screw 2.5”
Electro Galvanized

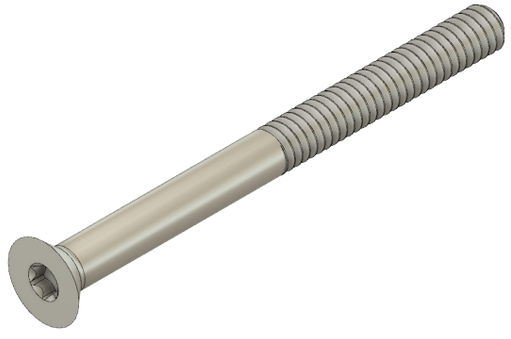

100.015.0020
Toggle Screw 3”
Electro Galvanized

Business Case

- ✓ Fully engineered, easy to fabricate system
- ✓ Engineered for a wood production environment
- ✓ Only machine needed is a chop saw
- ✓ Opens new opportunities
- ✓ Eliminates huge costs in seismic areas
- ✓ Saves a lot of installation time
- ✓ Eliminates blocking = 10-15% of cabinet cost

TABLE OF CONTENTS
OPM-0086-13

	PAGE
GENERAL NOTES	2
ABBREVIATIONS	4
DESIGN CRITERIA	5
OVERHEAD CABINET ATTACHED TO WALL	6
TALL CABINET ATTACHED TO FLOOR AND WALL	7
BASE CABINET ATTACHED TO FLOOR ONLY	8
SEISMIC BRACKET DETAIL	9
MOUNTING RAIL & OVERHEAD SEISMIC BRACKET DETAILS	9
TOEKICK ASSEMBLY & CABINET TO TOEKICK ATTACHMENT DETAILS	10
ATTACHMENT DETAILS TO SUPPORTING FLOOR	11

NOTES:

1. THESE DRAWINGS ARE PREPARED FOR CINDRE LLC OF BEND, OREGON.
2. THE CONTRACTOR AND INSPECTOR OF RECORD SHALL OBTAIN A COPY OF THIS PRE-APPROVAL FROM THE OSHPD PRE-APPROVAL PROGRAMS WEBSITE.
3. THIS PRE-APPROVAL COVERS THE SUPPORTS AND ATTACHMENTS OF CABINETS TO THE SUPPORTING STRUCTURE. THE CABINETS AND ATTACHMENT HARDWARE ARE SUPPLIED BY CINDRE. ALL FASTENERS (e.g. SCREWS, EXPANSION ANCHORS, ETC) SHOWN IN THIS OPM SHALL BE SUPPLIED AND INSTALLED BY THE CONTRACTOR, UNLESS SPECIFICALLY NOTED OTHERWISE.

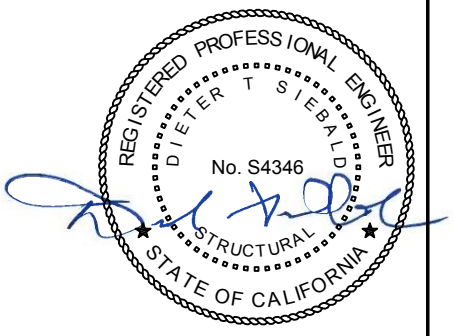

Sheet Title: TABLE OF CONTENTS

CYS STRUCTURAL ENGINEERS, INC.
2495 NATOMAS PARK DRIVE, SUITE 650
SACRAMENTO, CA 95833
TEL (916) 920-2020
www.cyseng.com

Job No:	13133
Date:	8/26/2014
Page:	1 of 11

L:\Jobs13\13133 Cindre - Cabinet OPM-0086-13\STRU\S1.dwg Time:Aug26,2014-12:22pm Login:camachom Dimscale:1 LTScale:4

GENERAL NOTES:

1. THIS OSHPD PRE-APPROVAL OF MANUFACTURER'S CERTIFICATION (OPM) IS BASED ON THE CBC 2013. THE DEMAND (DESIGN FORCES) FOR USE WITH THIS OPM SHALL BE BASED ON THE CBC 2013.
2. IT IS THE RESPONSIBILITY OF THE STRUCTURAL ENGINEER OF RECORD FOR A SITE SPECIFIC PROJECT TO VERIFY:
   - A. THE ADEQUACY OF THE NEW OR EXISTING STRUCTURE TO RESIST THE FORCES AND WEIGHT SPECIFIED FOR EACH EQUIPMENT IN ADDITION TO ALL OTHER LOADS. PROVIDE AND DESIGN SUPPLEMENTARY MEMBERS AS REQUIRED.
   - B. THAT THE FLOOR ANCHORS ARE LOCATED AT AN ADEQUATE DISTANCE FROM ANY SLAB EDGES OR OPENINGS.
   - C. THAT THE FLOOR ANCHORS ARE LOCATED AT AN ADEQUATE DISTANCE FROM ANY NEW OR EXISTING ANCHORS. THE SPACING SHOWN IN THE TEST LOADS TABLE ON PAGE 3 IS THE REQUIRED MINIMUM SPACING OF THE GIVEN DIAMETER ANCHORS. THE REQUIRED SPACING FROM ANCHORS OF OTHER DIAMETERS AND EMBEDMENTS MAY VARY AND SHALL BE EVALUATED BY THE SEOR.
   - D. THAT THE INSTALLATION IS IN CONFORMANCE WITH THE CBC 2013 AND WITH THE DETAILS SHOWN IN THIS PRE-APPROVAL.
   - E. THAT THE ACTUAL EQUIPMENT'S WEIGHT, CENTER OF GRAVITY (CG) LOCATION, ANCHOR LOCATIONS, ANCHOR DETAILS, AND THE MATERIAL AND GAUGE OF THE EQUIPMENT WHERE ATTACHMENTS ARE MADE, AGREE WITH THE INFORMATION SHOWN ON THE PRE-APPROVAL DOCUMENTS.
3. EXPANSION ANCHORS INSTALLED IN NORMAL WEIGHT OR SAND-LIGHTWEIGHT CONCRETE SHALL BE CARBON STEEL HILTI KB-TZ EXPANSION ANCHORS COMPLYING WITH ICC ESR-1917 REISSUED MAY 1, 2013.
   - A. INSTALLATION: INSTALL THE EXPANSION ANCHORS IN ACCORDANCE WITH THE REQUIREMENTS GIVEN IN THE ICC EVALUATION REPORT FOR THE SPECIFIC ANCHOR AND THE PARAMETERS GIVEN IN THE TABLE ON PAGE 3.
   - B. TESTING:
     - JOB TESTING: FOR VERIFYING SATISFACTORY INSTALLATION WORKMANSHIP, PERFORM JOB SITE TESTING IN ACCORDANCE WITH THE TEST LOAD VALUES GIVEN IN THE TABLE ON PAGE 3. TEST 50% OF THE INSTALLED ANCHORS. THE TEST LOAD MAY BE APPLIED BY ANY METHOD THAT WILL EFFECTIVELY MEASURE THE TENSION IN THE ANCHOR SUCH AS DIRECT PULL WITH A HYDRAULIC JACK OR CALIBRATED SPRING LOADING DEVICES. ALL TESTS SHALL BE CONDUCTED IN THE PRESENCE OF THE INSPECTOR OF RECORD. IF ANY ANCHOR FAILS THE TEST, TEST ALL ANCHORS. THE TEST SHALL BE PERFORMED 24 HOURS OR MORE AFTER INSTALLATION. TESTING MAY BE DONE PRIOR TO EQUIPMENT INSTALLATION. ALSO REFER TO CBC 1913A.7 "FIELD TESTS FOR POST-INSTALLED ANCHORS IN CONCRETE".
     - FAILURE/ACCEPTANCE CRITERIA: THE FOLLOWING CRITERIA APPLY FOR THE ACCEPTANCE OF INSTALLED ANCHORS:
       - HYDRAULIC RAM METHOD: APPLY AND HOLD TEST LOAD FOR A MINIMUM OF 15 SECONDS. THE ANCHOR SHOULD HAVE NO OBSERVABLE MOVEMENT AT THE APPLICABLE TEST LOAD WHERE WASHERS ARE USED. FOR WEDGE TYPE ANCHORS, SUCH AS HILTI KB-TZ, A PRACTICAL WAY TO DETERMINE OBSERVABLE MOVEMENT IS THAT THE WASHER UNDER THE NUT BECOMES LOOSE.
       - TORQUE WRENCH METHOD: THE APPLICABLE TEST TORQUE MUST BE REACHED WITHIN THE FOLLOWING LIMITS: WEDGE TYPE: ONE-HALF (½) TURN OF THE NUT.

REGISTERED PROFESSIONAL ENGINEER
DIETER T SIEBALD
No. S4346
STRUCTURAL
STATE OF CALIFORNIA

Sheet Title: GENERAL NOTES

CYS STRUCTURAL ENGINEERS, INC.
2495 NATOMAS PARK DRIVE, SUITE 650
SACRAMENTO, CA 95833
TEL (916) 920-2020
www.cyseng.com

L:\Jobs13\13133 Cindre - Cabinet OPM-0086-13\STRU\S1.dwg Time:Aug26,2014-12:22pm Login:camachom Dimscale:1 LTScale:4

GENERAL NOTES CONTINUED:

3C. TEST VALUES: APPLY TEST LOADS TO ANCHORS WITHOUT REMOVING THE NUT IF POSSIBLE, SEE TABLE BLW.

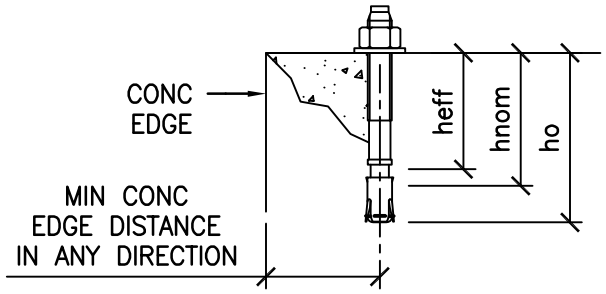

ANCHOR DIA (INCH)	INSTALLATION EMBED (INCH) hnom	EFFECTIVE EMBED (INCH) heff	HOLE DEPTH (INCH) ho	MIN CONC THICKNESS (INCH) h	MIN CONC EDGE DISTANCE (INCH)	MIN AB SPACING (INCH)	TEST LOAD		CONDITION OF ANCHORAGE
							TENSION LOAD (LBS)	TORQUE (FT-LBS)	
3/8	2 5/16	2	2 5/8	4	12	4	1500	25	NWC
3/8	2 5/16	2	2 5/8	3 1/4	12	4	800	25	SLWC

4. FOUR (4) CASES OF ATTACHMENT ARE SPECIFIED AND PRESENTED IN THIS PRE-APPROVAL:

CASE 1: ATTACHMENT DTLS LOCATED AT OR BLW THE BASE OF A BLDG (z/h=0). THE FLRS ARE ASSUMED TO BE BUILT OF A MIN 4" NWC SLAB (f'c = 3000 PSI MIN).

CASE 2: ATTACHMENT DTLS LOCATED AT UPPER FLRS ABV THE BASE OF A BLDG (z/h≤1.0), THE FLRS ARE ASSUMED TO BE BUILT OF A MIN 3¼" SLWC TOPPING OVER MTL DECK OR MIN 4" NWC SLAB (EA f'c = 3000 PSI MIN).

CASE 3: ATTACHMENT DTLS LOCATED AT UPPER FLRS ABV THE BASE OF A BLDG (z/h≤0.9), THE FLRS ARE ASSUMED TO BE BUILT OF A MIN 3¼" SLWC TOPPING OVER MTL DECK OR MIN 4" NWC SLAB (EA f'c = 3000 PSI MIN).
FOR THIS CASE THE MAX S_{DS} IS LIMITED TO 1.75.

CASE 4: ATTACHMENT DTLS LOCATED AT UPPER FLRS ABV THE BASE OF A BLDG (z/h≤0.9), THE FLRS ARE ASSUMED TO BE BUILT OF A MIN 3¼" SLWC TOPPING OVER MTL DECK (f'c = 3000 PSI MIN).
FOR THIS CASE THE MAX S_{DS} IS LIMITED TO 1.25.

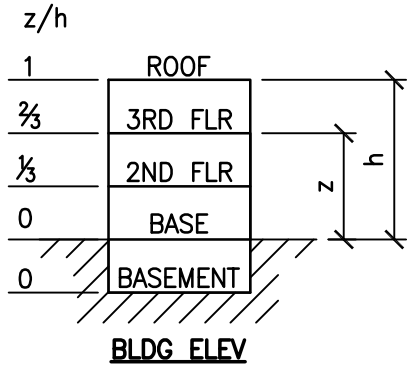

5. THIS PRE-APPROVAL MAY BE USED AT ANY GEOGRAPHICAL LOCATION IN THE STATE OF CALIFORNIA WHERE S_{DS} IS LESS THAN OR EQ TO 2.50, **EXCEPT FOR CASES 3 & 4 WHERE S_{DS} MUST BE LESS THAN OR EQ TO THE VALUE NOTED ABV.**

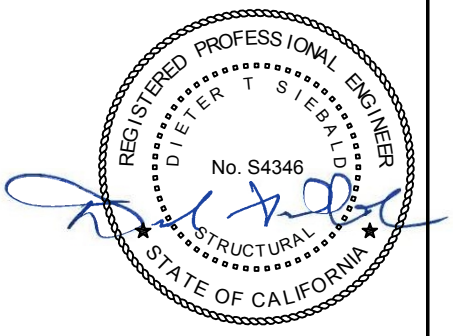

Sheet Title: GENERAL NOTES (CONTINUED)

CYS STRUCTURAL ENGINEERS, INC.
2495 NATOMAS PARK DRIVE, SUITE 650
SACRAMENTO, CA 95833
TEL (916) 920-2020
www.cyseng.com

Job No:	13133
Date:	8/26/2014
Page:	3 of 11

L:\Jobs13\13133 Cindre - Cabinet OPM-0086-13\STRU\S1.dwg Time:Aug26,2014-12:22pm Login:camachom Dimscale:1 LTScale:4

ABBREVIATIONS:

@	AT
AB	ANCHOR BOLT
ABV	ABOVE
ALUM	ALUMINUM
ASD	ALLOWABLE STRENGTH DESIGN
ASTM	AMERICAN SOCIETY FOR TESTING & MATERIALS
BLDG	BUILDING
BLKG	BLKG
BLW	BELOW
BOTT	BOTTOM
BRG	BEARING
BTW	BETWEEN
CBC	CALIFORNIA BUILDING CODE
CG	CENTER OF GRAVITY
CLR	CLEAR
CLSE	CALIFORNIA LICENSED STRUCTURAL ENGINEER
℄	CENTERLINE
CONC	CONCRETE
CONN	CONNECTION
DBL	DOUBLE
DTL(S)	DETAIL(S)
DIA (ø)	DIAMETER
(E)	EXISTING CONDITION
EA	EACH
e.g.	FOR EXAMPLE
ELEV	ELEVATION
EQ	EQUAL
ES	EACH SIDE
FLG	FLANGE
FLR	FLOOR
f'c	SPECIFIED MINIMUM COMPRESSIVE STRENGTH OF CONCRETE
F_p	HORIZONTAL SEISMIC FORCE PER ASCE 7-10 SEISMIC FORCE REQUIREMENTS
FT (')	FOOT/FEET
F_v	VERTICAL SEISMIC FORCE PER ASCE 7-10 SEISMIC FORCE REQUIREMENTS
F_y	SPECIFIED YIELD STRENGTH OF REINFORCING OR SPECIFIED MINIMUM YIELD STRESS OF STEEL/ALUMINUM
GA	GAUGE
GWB	GYPSUM WALLBOARD
HT	HEIGHT
ICC	INTERNATIONAL CODE COUNCIL
IN (")	INCHES
KSI	KIPS PER SQUARE INCH
LBS	POUNDS
LRFD	LOAD & RESISTANCE FACTOR DESIGN
MAX	MAXIMUM
MFR	MANUFACTURER
MIN	MINIMUM
MTL	METAL
NO. (#)	NUMBER OR POUNDS
NWC	NORMAL-WEIGHT CONCRETE
OC	ON CENTER
OPG	OPENING
OPM	OSPHD PRE-APPROVAL OF MANUFACTURER'S CERTIFICATION
OSHPD	OFFICE OF STATEWIDE HEALTH PLANNING & DEVELOPMENT
PCF	POUNDS PER CUBIC FOOT
PG(S)	PAGE(S)
ℙ	PLATE
PSI	POUNDS PER SQUARE INCH
RDP	REGISTERED DESIGN PROFESSIONAL
REQ	REQUIRED
SEOR	STRUCTURAL ENGINEER OF RECORD
SIM	SIMILAR
SLWC	SAND-LIGHTWEIGHT CONCRETE
SMS	SHEET METAL SCREWS
STAG	STAGGER
STL	STEEL
T	TENSION REACTION
THK	THICK/THICKNESS
TOC	TOP OF CONCRETE
TYP	TYPICAL
V	SHEAR REACTION
VERT	VERTICAL
W_p	COMPONENT OPERATING WEIGHT
W/	WITH
WS	WOOD SCREW
WT	WEIGHT

REGISTERED PROFESSIONAL ENGINEER
DIETER T SIEBALD
No. S4346
STRUCTURAL
STATE OF CALIFORNIA

Sheet Title: ABBREVIATIONS

CYS STRUCTURAL ENGINEERS, INC.
2495 NATOMAS PARK DRIVE, SUITE 650
SACRAMENTO, CA 95833
TEL (916) 920-2020
www.cyseng.com

Job No:	13133
Date:	8/26/2014
Page:	4 of 11

L:\Jobs13\13133 Cindre - Cabinet OPM-0086-13\STRU\S1.dwg Time:Aug26,2014-12:23pm Login:camachom Dimscale:1 LTScale:4

DESIGN CRITERIA

ATTACHMENT DESIGN IS PER 2013 CBC AT LRFD LEVEL FORCES.

CABINETS PER TABLE 13.5-1 OF ASCE 7-10 SUPPLEMENT #1

a_p = 1.0 R_p= 2.5 I_p = 1.5 Ω_o = 2.5 (USE FOR CONC ANCHORS ONLY)

CABINET WT, W_p = 38 PCF

CASE 1: z/h = 0 (SLAB AT OR BLW BASE)
S_{DS} = 2.50 F_p = 1.13 W_p F_v = 0.50 W_p

CASE 2: z/h ≤ 1.0 (ANY LOCATION IN THE BLDG)
S_{DS} = 2.50 F_p = 1.80 W_p F_v = 0.50 W_p

CASE 3: z/h ≤ 0.9
S_{DS} = 1.75 F_p = 1.18 W_p F_v = 0.35 W_p

CASE 4: z/h ≤ 0.9
S_{DS} = 1.25 F_p = 0.84 W_p F_v = 0.25 W_p

REGISTERED PROFESSIONAL ENGINEER
DIETER T SIEBALD
No. S4346
STRUCTURAL
STATE OF CALIFORNIA

Sheet Title: DESIGN CRITERIA

CYS STRUCTURAL ENGINEERS, INC.
2495 NATOMAS PARK DRIVE, SUITE 650
SACRAMENTO, CA 95833
TEL (916) 920-2020
www.cyseng.com

Job No:	13133
Date:	8/26/2014
Page:	5 of 11

L:\Jobs13\13133 Cindre - Cabinet OPM-0086-13\STRU\S1.dwg Time:Aug26,2014-12:23pm Login:camachom Dimscale:1 LTScale:4

CINDRE LLC
SEISMIC SUPPORTS AND ATTACHMENTS FOR CABINETS

	MAX ASD FORCES PER SCREW			
	CABINET TO RAIL		RAIL TO STUD	
	T_{max}	V_{max}	T_{max}	V_{max}
CASE 2	91#	70#	91#	70#
CASE 3	67#	57#	67#	57#

OVERSTRENGTH FACTOR (Ω_o) EXCLUDED.

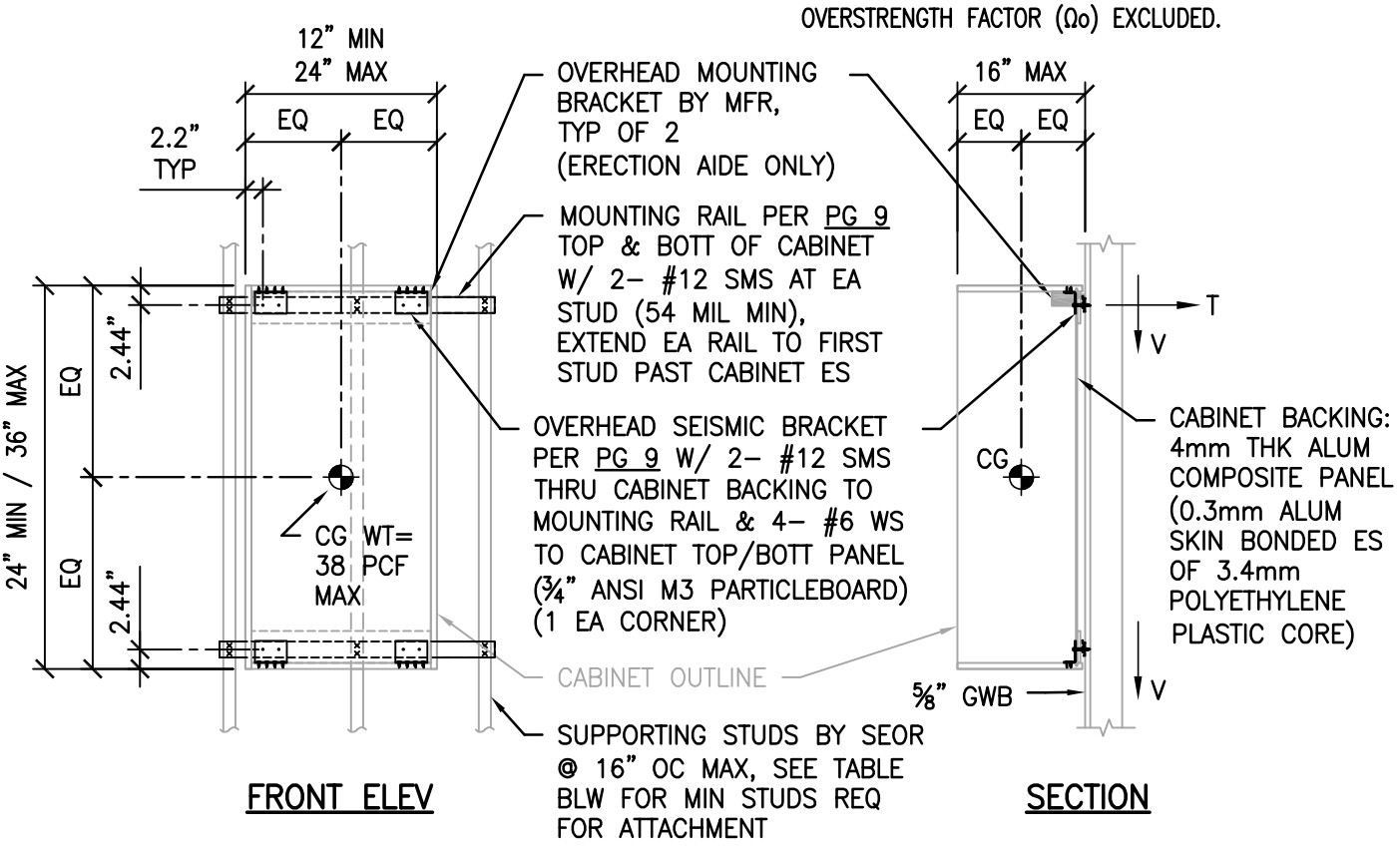

FRONT ELEV

SECTION

MIN STUDS REQ FOR ATTACHMENT
(SINGLE OR DBL) @ 16" OC MAX SPACING

S_{DS}	CASE	MAX z/h	HUNG CABINET HT		TALL CABINET DEPTH	
			36" MAX	30" MAX	24" MAX	16" MAX
≤2.50	2	1.0	SINGLE 54 MIL	SINGLE 43 MIL	DBL 54 MIL	DBL 43 MIL
≤1.75	3	0.9	SINGLE 43 MIL	SINGLE 43 MIL	DBL 43 MIL	SINGLE 43 MIL

THK & STRENGTH (GAUGE REFERENCE):
43 MIL, 33 KSI (18 GA)
54 MIL, 50 KSI (16 GA)

REGISTERED PROFESSIONAL ENGINEER
DIETER T SIEBALD
No. S4346
STRUCTURAL
STATE OF CALIFORNIA

Sheet Title: OVERHEAD CABINET ATTACHED TO WALL

CYS STRUCTURAL ENGINEERS, INC.
2495 NATOMAS PARK DRIVE, SUITE 650
SACRAMENTO, CA 95833
TEL (916) 920-2020
www.cyseng.com

Job No:	13133
Date:	8/26/2014
Page:	6 of 11

L:\Jobs13\13133 Cindre - Cabinet OPM-0086-13\STRU\S1.dwg Time:Aug26,2014-12:23pm Login:camachom Dimscale:1 LTScale:4

CINDRE LLC
SEISMIC SUPPORTS AND ATTACHMENTS FOR CABINETS

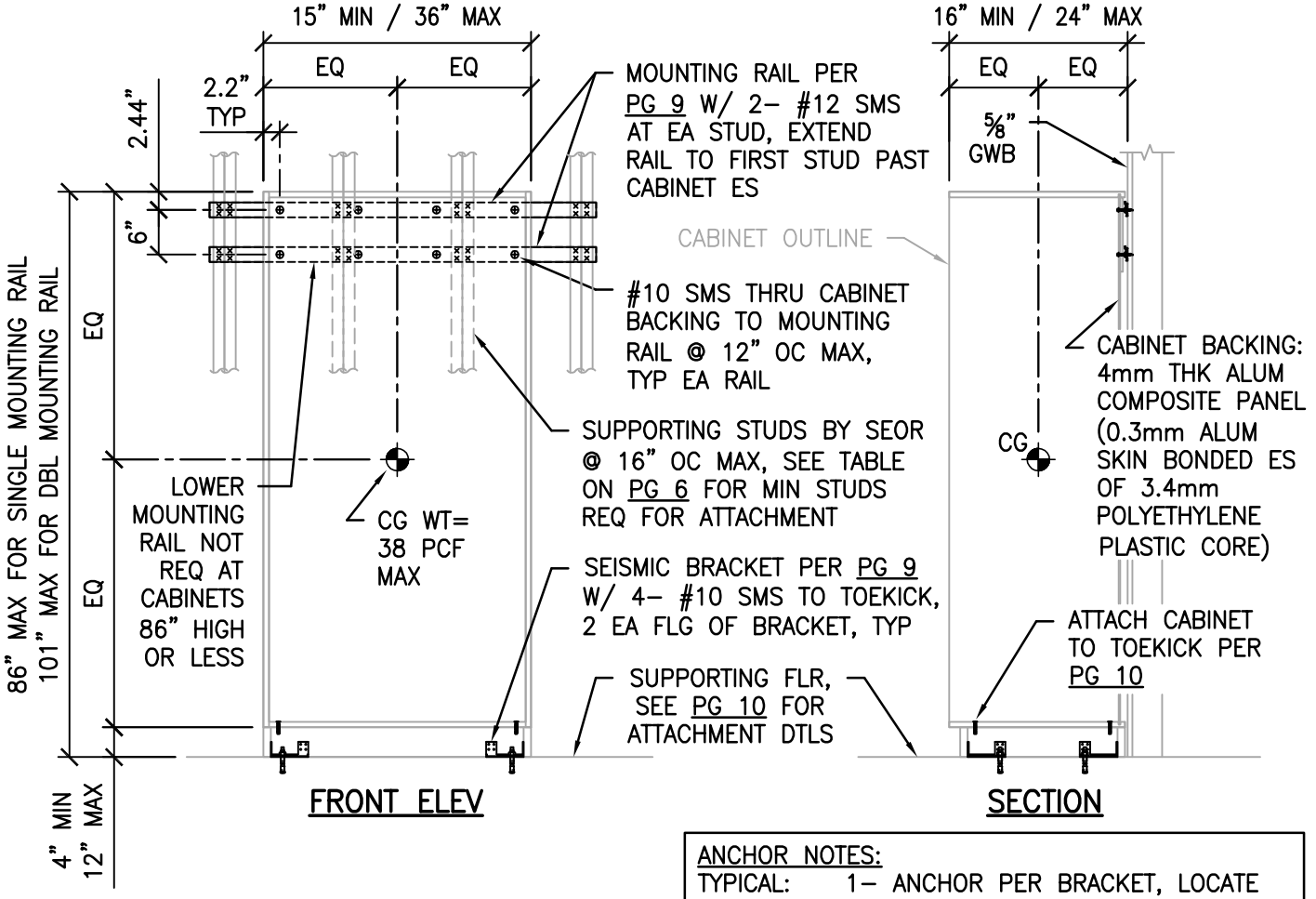

ANCHOR NOTES:
TYPICAL: 1- ANCHOR PER BRACKET, LOCATE IN HOLE CLOSEST TO TOEKICK SIDE.
EXCEPTION: 2- ANCHORS PER BRACKET ARE REQ FOR CABINETS DEEPER THAN 16" WHEN FLR IS SLWC & S_{DS}>1.75.

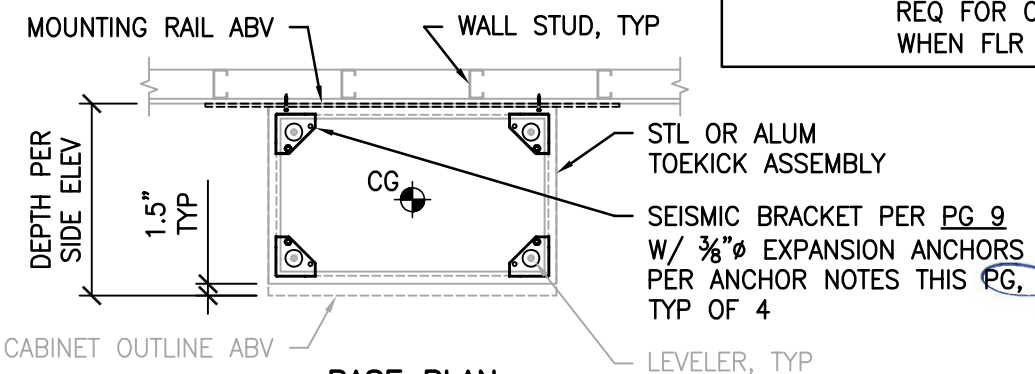

BASE PLAN

REGISTERED PROFESSIONAL ENGINEER
DIETER T SIEBALD
No. S4346
STRUCTURAL
STATE OF CALIFORNIA

Sheet Title: TALL CABINET ATTACHED TO FLOOR AND WALL

CYS STRUCTURAL ENGINEERS, INC.
2495 NATOMAS PARK DRIVE, SUITE 650
SACRAMENTO, CA 95833
TEL (916) 920-2020
www.cyseng.com

Job No:	13133
Date:	8/26/2014
Page:	7 of 11

L:\Jobs13\13133 Cindre - Cabinet OPM-0086-13\STRU\S1.dwg Time:Aug26,2014-12:23pm Login:camachom Dimscale:1 LTScale:4

CINDRE LLC
SEISMIC SUPPORTS AND ATTACHMENTS FOR CABINETS

BASE CABINET ATTACHMENT APPLICABILITY				
S_{DS}	CASE	MAX z/h	SUPPORTING FLR	MAX BASE CABINET HT
≤2.50	1	0	NWC SLAB ON GRADE	44"
	2	1.0	NWC SLAB	36"
≤1.75	3	0.9	NWC SLAB	44"
			SLWC OVER MTL DECK	36"
≤1.25	4	0.9	SLWC OVER MTL DECK	44"

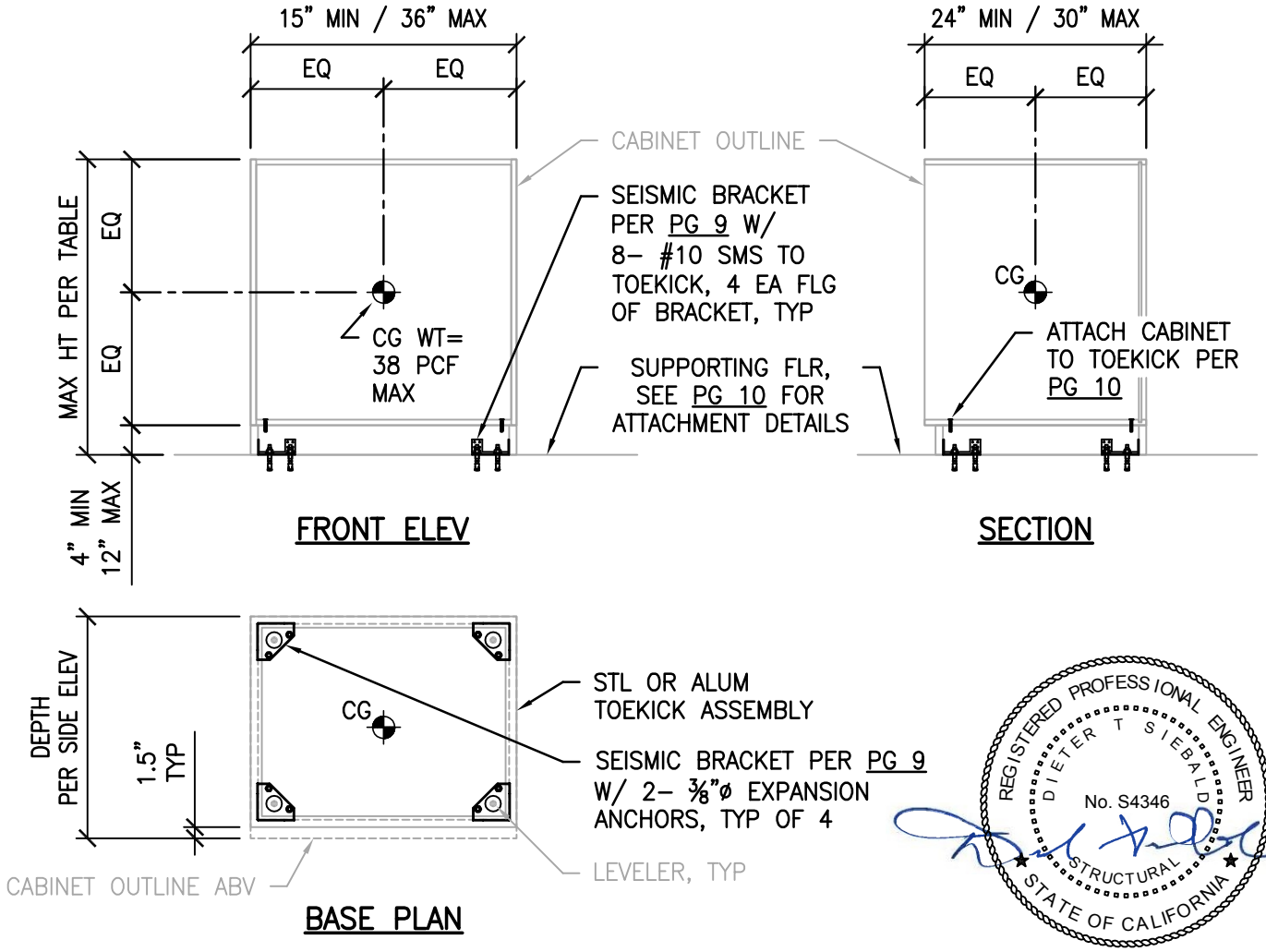

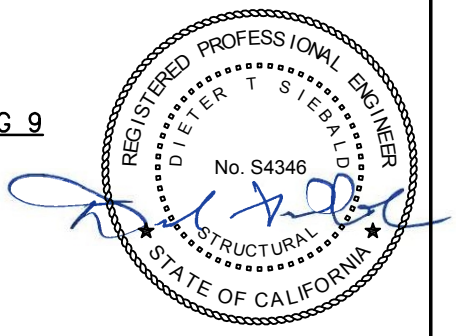

Sheet Title: BASE CABINET ATTACHED TO FLOOR ONLY

CYS STRUCTURAL ENGINEERS, INC.
2495 NATOMAS PARK DRIVE, SUITE 650
SACRAMENTO, CA 95833
TEL (916) 920-2020
www.cyseng.com

Job No:	13133
Date:	8/26/2014
Page:	8 of 11

L:\Jobs13\13133 Cindre - Cabinet OPM-0086-13\STRU\S1.dwg Time:Aug26,2014-12:23pm Login:camachom Dimscale:1 LTScale:4

CINDRE LLC
SEISMIC SUPPORTS AND ATTACHMENTS FOR CABINETS

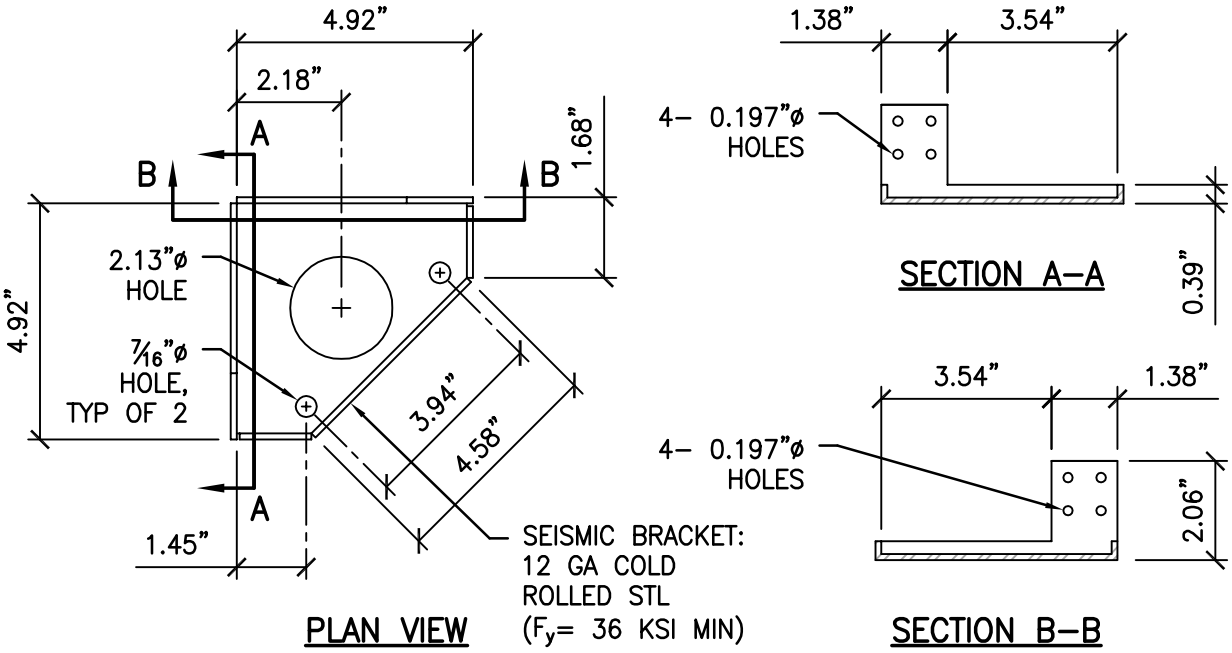

PLAN VIEW

SECTION A–A

SECTION B–B

SEISMIC BRACKET

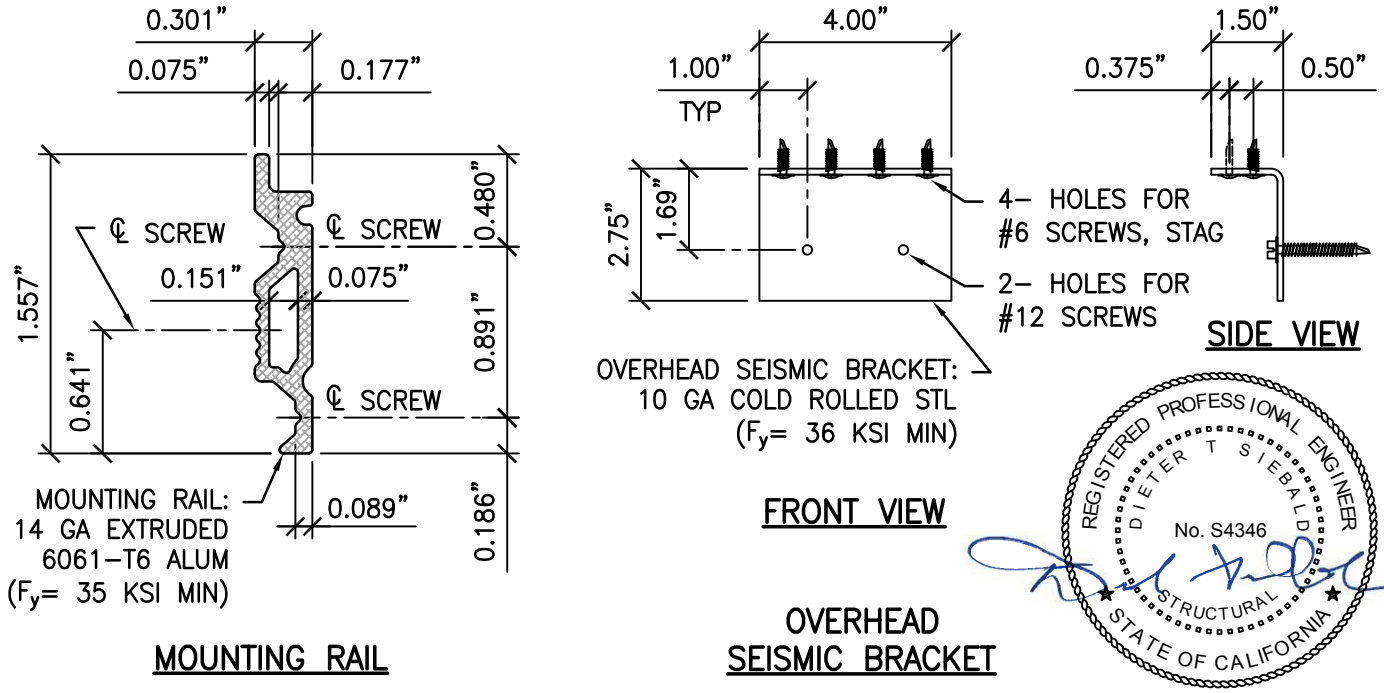

MOUNTING RAIL

FRONT VIEW

SIDE VIEW

OVERHEAD SEISMIC BRACKET

REGISTERED PROFESSIONAL ENGINEER
DIETER T SIEBALD
No. S4346
STRUCTURAL
STATE OF CALIFORNIA

Sheet Title: SEISMIC BRACKET DETAIL
MOUNTING RAIL & OVERHEAD SEISMIC BRACKET DETAILS

CYS STRUCTURAL ENGINEERS, INC.
2495 NATOMAS PARK DRIVE, SUITE 650
SACRAMENTO, CA 95833
TEL (916) 920-2020
www.cyseng.com

Job No:	13133
Date:	8/26/2014
Page:	9 of 11

L:\Jobs13\13133 Cindre - Cabinet OPM-0086-13\STRU\S1.dwg Time:Aug26,2014-12:23pm Login:camachom Dimscale:1 LTScale:4

CINDRE LLC
SEISMIC SUPPORTS AND ATTACHMENTS FOR CABINETS

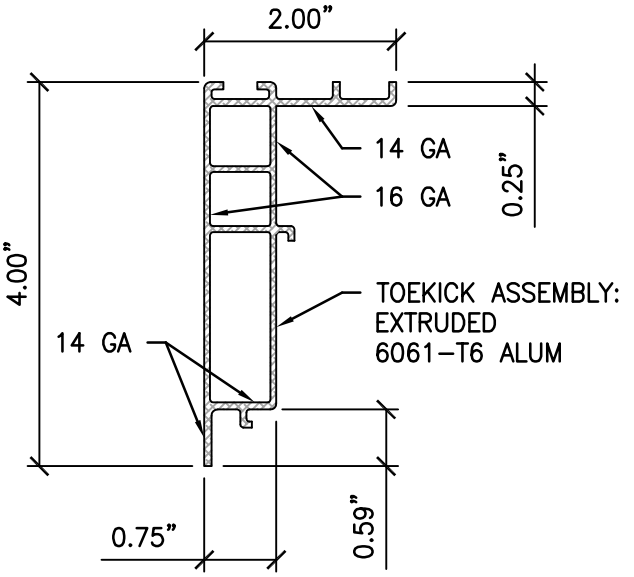

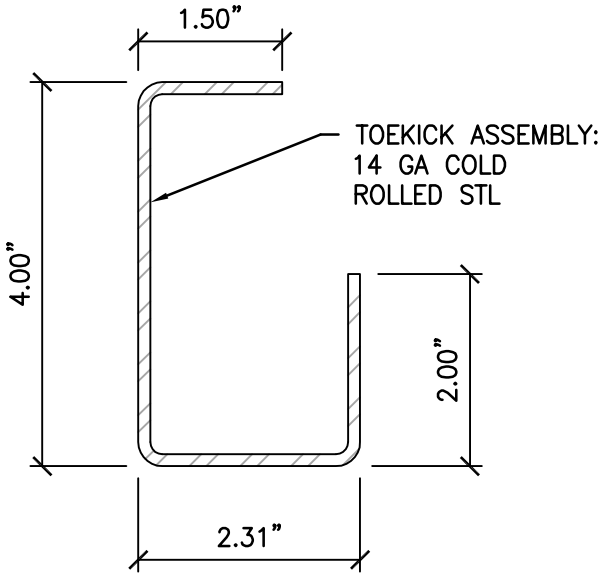

ALUM PROFILE PROPERTIES

F_u = 45 KSI
F_y = 40 KSI
E = 10,000 KSI
SHEAR MODULUS = 3.77 KSI
SHEAR STRENGTH = 30 KSI
CROSS SECTIONAL AREA = 0.881 IN^2

STL PROFILE PROPERTIES

F_u = 81.2 KSI
F_y = 66.7 KSI
E = 29,700 KSI
SHEAR MODULUS = 11.6 KSI
CROSS SECTIONAL AREA = 0.735 IN^2

TOEKICK ASSEMBLY

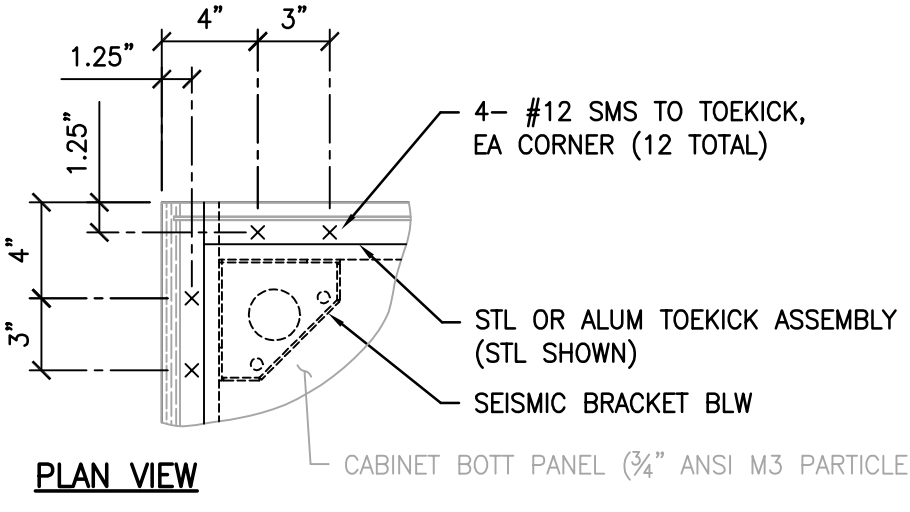

PLAN VIEW

CABINET TO TOEKICK ATTACHMENT

REGISTERED PROFESSIONAL ENGINEER
DIETER T SIEBALD
No. S4346
STRUCTURAL
STATE OF CALIFORNIA

Sheet Title: TOEKICK ASSEMBLY DETAIL
& CABINET TO TOEKICK ATTACHMENT DETAIL

CYS STRUCTURAL ENGINEERS, INC.
2495 NATOMAS PARK DRIVE, SUITE 650
SACRAMENTO, CA 95833
TEL (916) 920-2020
www.cyseng.com

Job No:	13133
Date:	8/26/2014
Page:	10 of 11

L:\Jobs13\13133 Cindre - Cabinet OPM-0086-13\STRU\S1.dwg Time:Aug26,2014-12:24pm Login:camachom Dimscale:1 LTScale:4

CINDRE LLC
SEISMIC SUPPORTS AND ATTACHMENTS FOR CABINETS

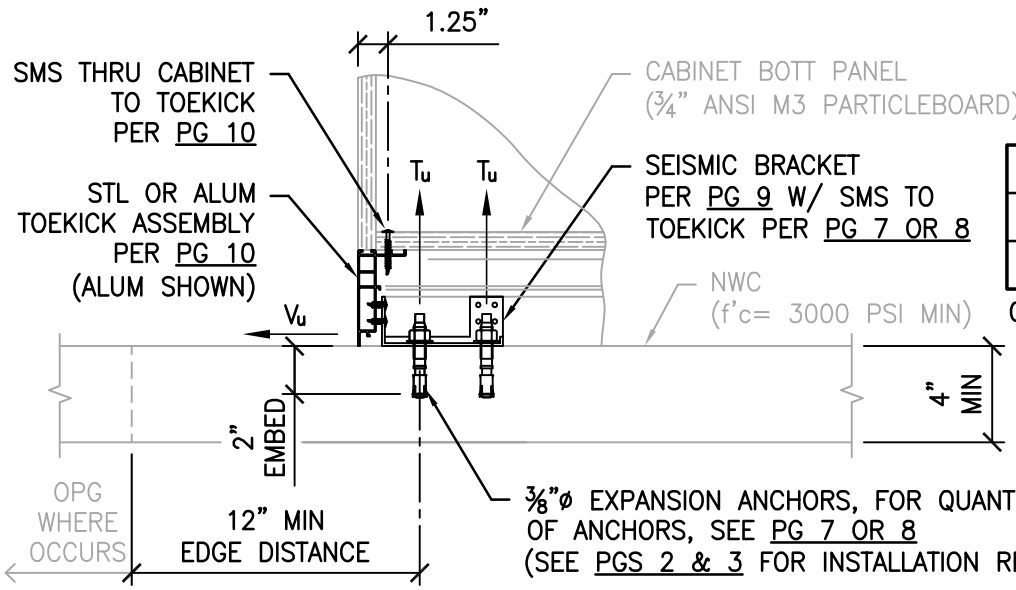

MAX LRFD FORCES AT EA ANCHOR IN NWC		
	Tu	Vu
CASE 1	778#	456#
CASE 2	843#	591#
CASE 3	801#	477#

OVERSTRENGTH FACTOR (Ωo) INCLUDED.

NWC SLAB

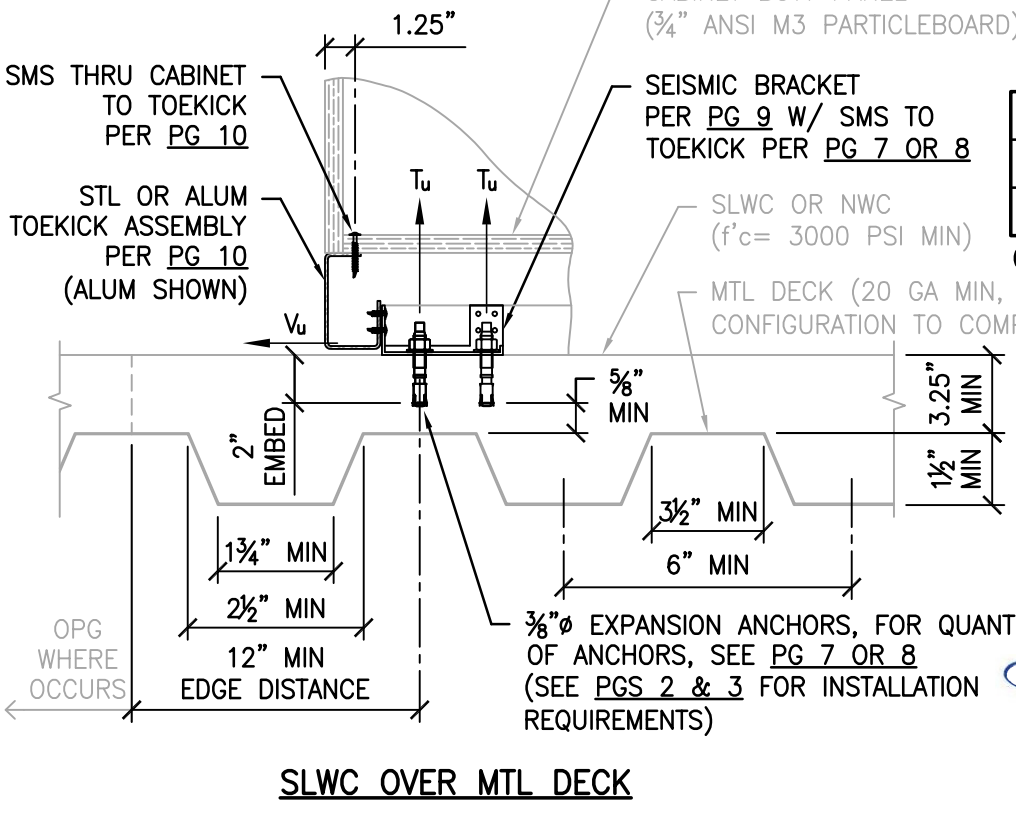

MAX LRFD FORCES AT EA ANCHOR IN SLWC		
	Tu	Vu
CASE 2	0#	643#
CASE 3	528#	386#
CASE 4	546#	340#

OVERSTRENGTH FACTOR (Ωo) INCLUDED.

SLWC OVER MTL DECK

REGISTERED PROFESSIONAL ENGINEER
DIETER T SIEBALD
No. S4346
STRUCTURAL
STATE OF CALIFORNIA

Sheet Title: ATTACHMENT DETAILS TO SUPPORTING FLOOR

CYS STRUCTURAL ENGINEERS, INC.
2495 NATOMAS PARK DRIVE, SUITE 650
SACRAMENTO, CA 95833
TEL (916) 920-2020
www.cyseng.com

Job No:	13133
Date:	8/26/2014
Page:	11 of 11

L:\Jobs13\13133 Cindre - Cabinet OPM-0086-13\STRU\S1.dwg Time:Aug26,2014-12:24pm Login:camachom Dimscale:1 LTScale:4

541-241-7793 | mgoelst@cindre.com | www.cindre.com | 61900 Anker Lane, Bend, OR 97702

© 2016-2017 cindre llc, all rights reserved